Series L910, L911 and L912 Backplates



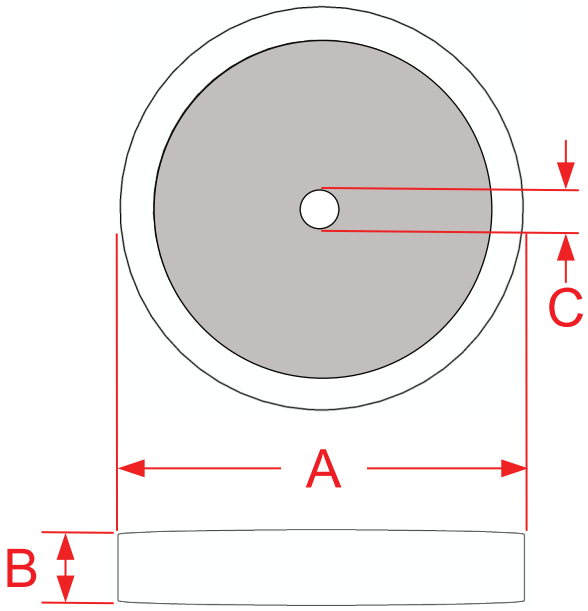

Part #	A Diameter	B Projection	C Hole Diameter	C Screw
L910	1.2500"	0.2500"	0.1600"	8-32
L911	1.5000"	0.2500"	0.1600"	8-32
L912	1.7500"	0.2500"	0.1600"	8-32
Custom Sizing Available				

The TANNER'S CRAFT™
www.tannerscraft.com
860.489.9233

MINIMUM 94% RECYCLED CONTENT PRE-CONSUMER

Made in the USA

A Division of
Colonial Bronze
Manufacturing Fine
Hardware Since 1927